JF-AHC-EDB3110-IR3-VF

1MP 4 In 1 AHD EDB Camera

JF TECH

HD IP66 2D DNR

Features

- 1/4" 1Mp CMOS
- HD lens: 2.8mm-12mm
- 2D Digital Noise Reduction
- Day/Night: IR-CUT
- 30m-40m IR Distance
- AHD/TVI/CVI/CVBS Switchable Video Output
- IP66 protection

Specification

Camera	
Model	JF-AHC-EDB3110-IR3-VF
Image Sensor	1/4" 1Mp CMOS
Min.Illumination	0.1Lux @F1.2 (Color)
	0.01 Lux @ F1.2 (B&W)
Frame Rate	50Hz:720P@25fps 60Hz:720P@30fps
Lens	2.8mm-12mm
Day/Night	IR-CUT
Max.IR Distance	40m
OSD Menu	-
WDR	-
Noise Reduction	2D
Interface	
Video Output	TVI/CVI/AHD/CVBS Switchable
Audio In	-
Alarm In/Out	-
General	
Ingression Protection	IP66
Working Temperature	-20°～65°
material	ABS plastic +Metal
Power	DC12V±10%

JF-AHC-EDB3110-IR3-VF

1MP 4 In 1 AHD ED Camera

Dimensions

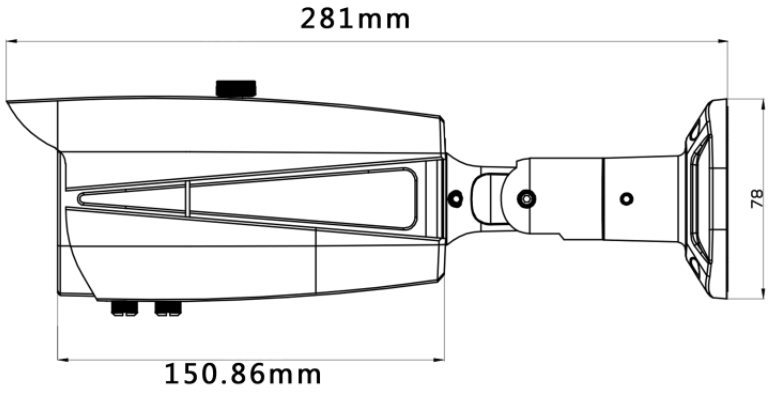

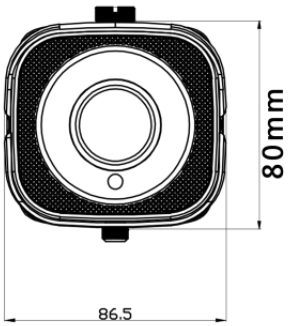

Accessories（optional）

JF TECH Co.,Ltd.
Headquarters(Hangzhou):
Building 9, Yinhu Innovation Center, Hangzhou, China
Business Center(Shenzhen):
A 7th Floor, Block Sakata 5 Avenue and Chong Hing Times Tower Shenzhen
Website:http://www.jftech.com
Tel:+86-0571-23271188
Tel:+86-0755-32898088
All Rights Reserved • Specifications subject to change without notice.